# Technical Bulletin
## AG2000 In Plastic Piping

### BACKGROUND

Water flow through plastic pipe can create static electricity that may potentially cause problems with the function of the AG2000. Flow velocity, amount of entrained air, total length of plastic pipe, and other environmental conditions determine the severity of the electrostatic problem.

### EFFECT OF STATIC ELECTRICITY ON THE AG2000

As the static electricity builds up across the electrodes, the high voltage may cause the processor to lock up, freezing the display or even causing it to go completely blank. In extreme cases, the processor may actually be damaged, requiring replacement of the AG2000.

### PREVENTATIVE ACTION REQUIRED

When the AG2000 is installed in a plastic piping system, grounding rings may be required, especially in the presence of electrical interference sources such as VFD pump drives. As shown in the diagram below, the equalization wires should then be connected to the grounding ring tabs instead of the flange bolts as in metal piping installations. Where lightning is a threat, or in severe electrical environments, an optional connection to a nearby equipment ground or ground rod may be advisable.

**NOTE:** *In areas where corrosion is a concern, the ground wire should be exothermically welded to the ground rod.*

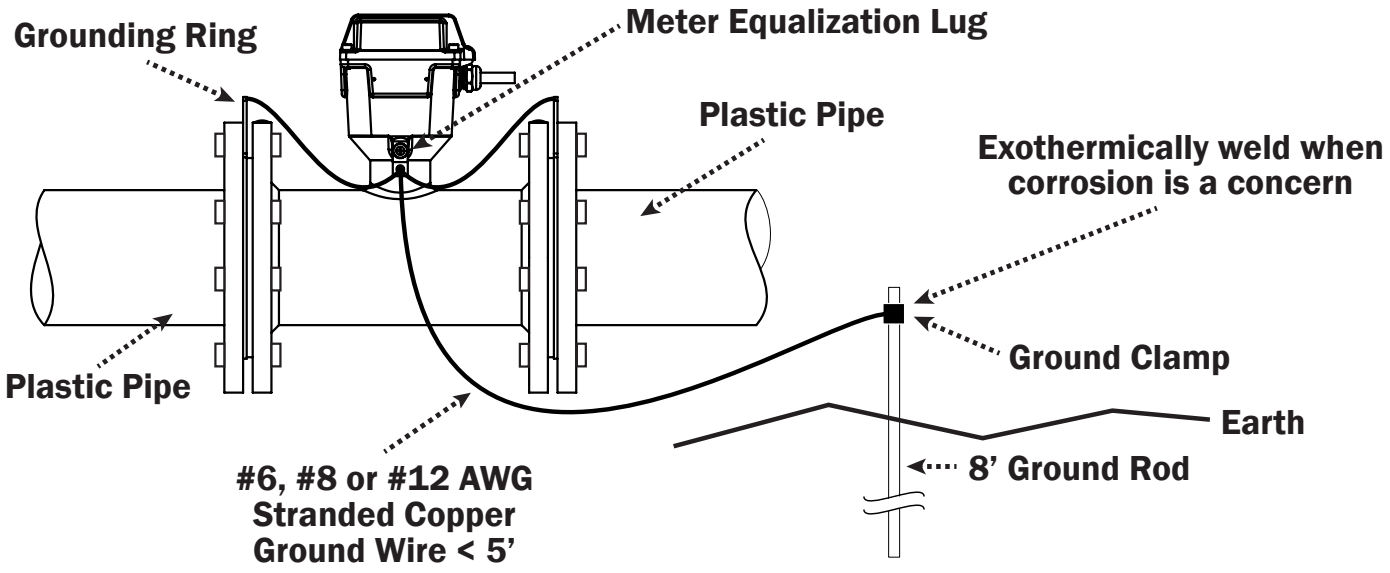


Seametrics Incorporated • 19026 72nd Avenue South • Kent, Washington 98032 • USA
(P) 253.872.0284 • (F) 253.872.0285 • 1.800.975.8153 • www.seametrics.com

LT-13333-B
4/21/15